SnapBee™

Wire-to-Board Swing-Lock Connector for Low-Profile Power Source

DF61 Series

(UL/C-UL Standard Certified Product)

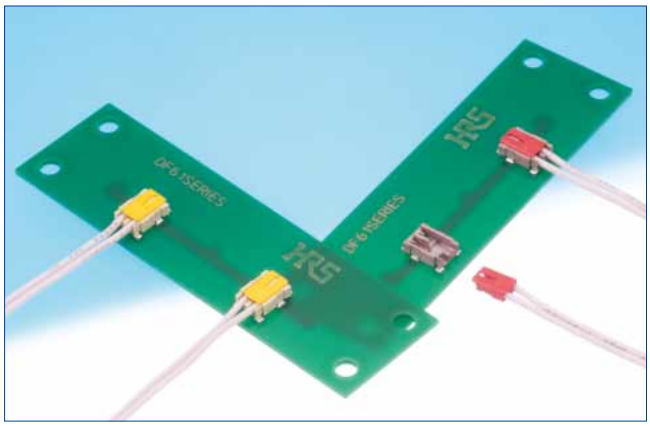

■Features

1.Reinforced Swing Lock Structure

Our unique swing-lock structure cradles the wire side plug and resists the plug from becoming disengaged due to handling strain or loads.

2.Header Lock Improves Plug Retention

During mating, the header lock engages with the plug assembly. The lock is reinforced with metal which adds strength to the lock and increases the retention between the header and the plug.

3.Compact Size- High Voltage

The compact 2.2mm pitch connector has a voltage rating of 350V due to the long creep distance.

4.Solder Wicking Prevention

Header is molded in one piece. This ensures a tight fit between the contact and the header and prevents solder wicking.

5.High Current of MAX 5 Amps (22AWG)

A highly conductive material is used for the contacts. The material provides for a high current flow by reducing the contact resistance.

■Applications

Digital cameras, digital video cameras, LED lights, laptop computers, tablet computers, portable devices, power supply equipment, etc.

Swing-Lock Structure Illustration

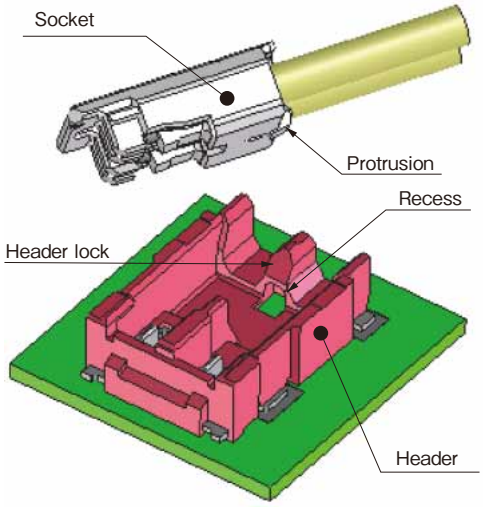

The protrusion on the bottom side of the socket fits into a corresponding recess on the header. This aligns the socket into the correct mating position.

Before Mating

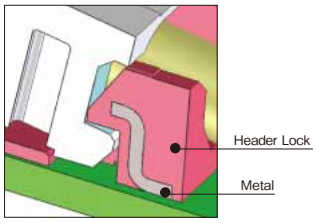

Reinforced with Metal

The metal fitting is partly molded in the header's housing lock.

After Mating

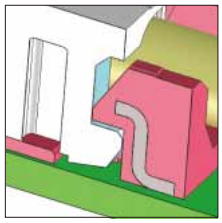

The Header pushes down the protrusion of the socket and locks it in place.

Tensile strength of the cable: 10N or greater

Maximum Creep Distance

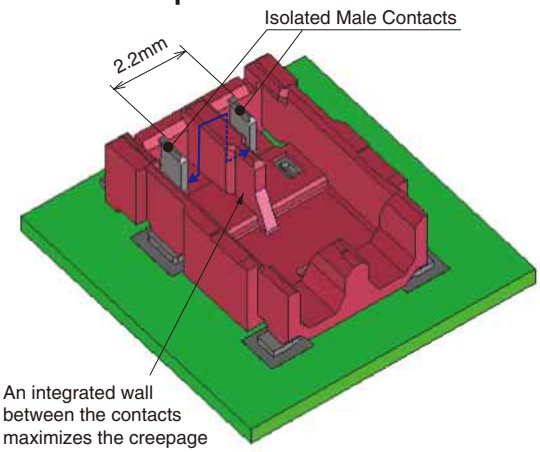

An integrated wall between the contacts maximizes the creepage distance for higher voltage capabilities.

■Product Specifications

Ratings	Current rating	3A/pin (with 28AWG) 3.2A/pin (with 26AWG) 4A/pin (with 24AWG) 5A/pin (with 22AWG)	Operating Temperature Range Operating Humidity Range	-55−105℃ (Note 1) 20−80%
	Voltage rating	AC/DC 350V	Storage Temperature Range Storage Humidity Range	-10−60℃ (Note 2) 40−70% (Note 2)

Items	Specifications	Conditions
1.Insulation resistance	1000MΩ or greater	Measured at DC 500V
2.Withstanding voltage	No flashover or breakdown	AC 1700V applied for 1 minute
3.Contact resistance	10mΩ or less	Measured at 20mV or less, 1mA
4.Vibration resistance	No electric outage of 1μs or more	Frequency 10-55Hz, half amplitude 0.75mm, 10 cycles for each of 3 directions
5.Shock resistance	No electric outage of 1μs or more	Acceleration 490 m/s^2, 11ms ; half sin wave : 3 each for 3 directions
6.Humidity resistance	Contact resistance 20mΩ or less, insulation resistance 500MΩ or greater	Temperature 40 ± 2℃, humidity 90-95%, left for 96 hours
7.Temperature cycle	Contact resistance 20mΩ or less insulation resistance 500MΩ or greater	5 cycles (-55℃ : 30 minutes → 5-35℃ : 2-3 minutes → 85℃ : 30 minutes → 5-35℃ : 2-3 minutes)
8.Insertion/extraction life	Contact resistance 20mΩ or less	Insertion/extraction : 30 times
9.Solder heat resistance	No melting of resin part affecting performance	Reflow : Per recommended temperature profile Hand solder : Manual soldering iron 350±10℃ for 3 seconds

Note 1 : Includes temperature elevation by conduction.
Note 2 : Apply to unused product on packaged condition.
Note 3 : The above specifications are representative for this series. Please refer to “delivery specifications” for official individual agreement.

■Materials / Finish

Product	Part	Material	Finish	Specification	RoHS2
Header	Insulator	LCP resin	Red	UL94V-0	YES
			Yellow		
			Beige		
	Contact	Brass	Tin plated	——	
Crimp Socket	Insulator	PBT	Red	UL94V-0	
			Yellow		
			White		
Crimp contact	Contact	Copper Alloy	Tin plated	——	

■Product Number Structure

Refer to the chart below when determining the product specifications from the product number.
Please select from the product numbers listed in this catalog when placing orders.

●Header

DF 61 – ＊ P – 2.2 V
❶ ❷ ❸ ❹ ❺ ❻

❶ Series Name : DF	❺ Pitch : 2.2mm
❷ Series No. : 61	❻ Termination form V : SMT straight type
❸ Number of contacts : 2	
❹ Type of connector P : Header	

●Crimp Housing

DF 61 – ＊ S – 2.2 C
❶ ❷ ❸ ❹ ❺ ❻

❶ Series Name : DF	❺ Pitch : 2.2mm
❷ Series No. : 61	❻ Termination form C : Crimp case
❸ Number of contacts : 2	
❹ Type of connector S : Socket	

●Contact

DF 61 – 2226 SCF
❶ ❷

❶ Applicable Wire Size 2628：26 to 28AWG 2226：22 to 26AWG	❷ Form Type/Package Type SCF : Socket crimp contact/reel

■Straight Header (SMT)

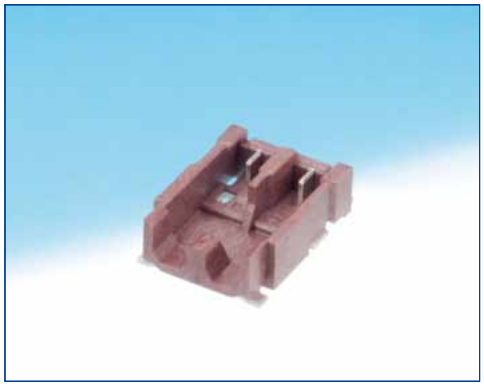

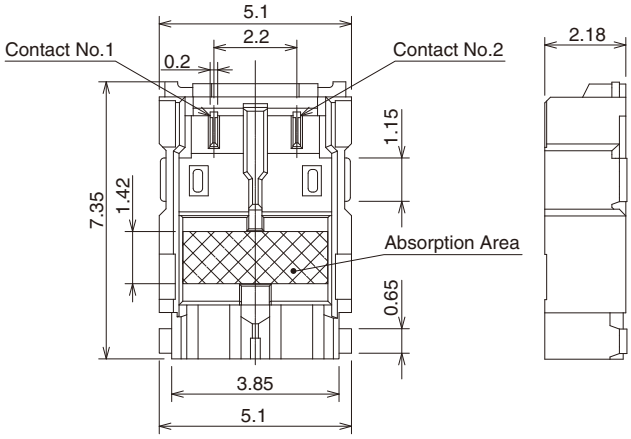

■Recommended PCB Dimensions(t=1mm)

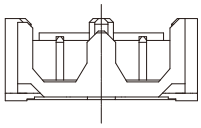

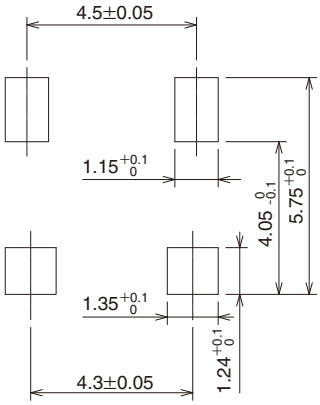

[Specification No.]
(21) : Tin plated, emboss package, mold color : red
(22) : Tin plated, emboss package, mold color : yellow
(23) : Tin plated, emboss package, mold color : beige

Unit : mm

Part No.	HRS No.	No. of contacts	Color
DF61-2P-2.2V(21)	666-5001-1 21	2	Red
DF61-2P-2.2V(22)	666-5001-1 22	2	Yellow
DF61-2P-2.2V(23)	666-5001-1 23	2	Beige

Note : For embossed package products, please order in full reel quantities. (1reel = 3,000pcs.)

●Reel Dimensions

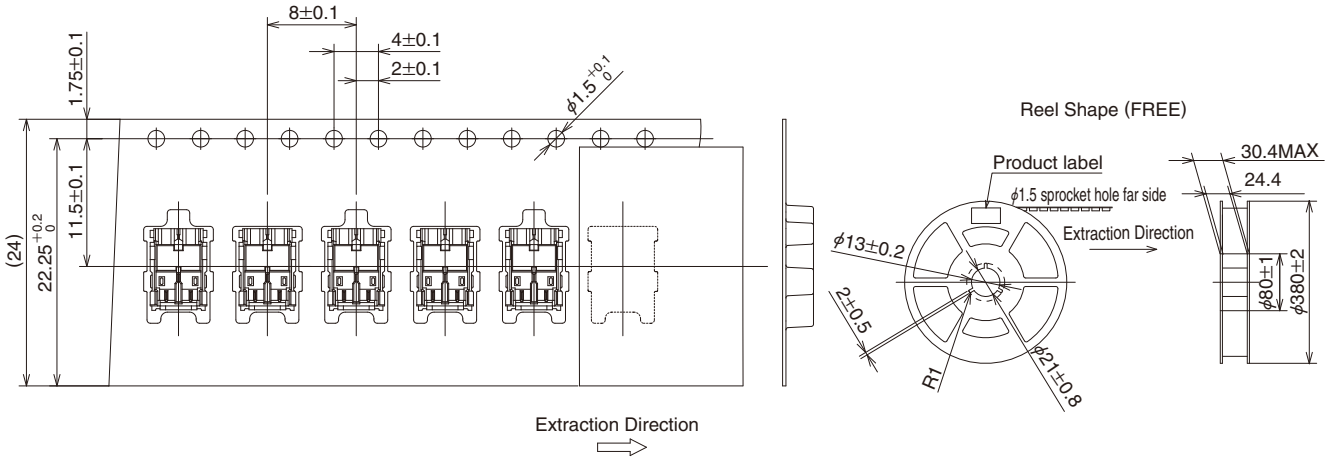

■Socket

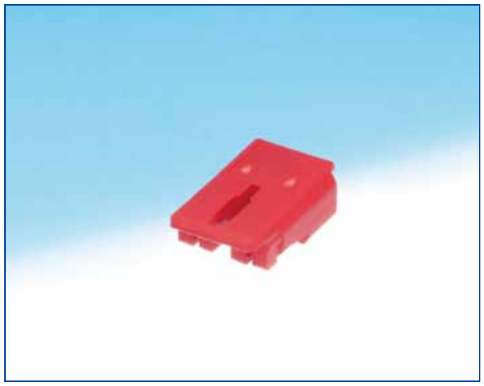

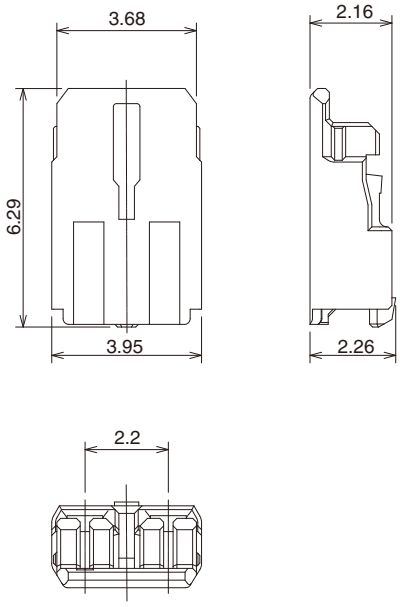

[Specification No.]
(11) : 1,000pcs/pack, mold color : red
(12) : 1,000pcs/pack, mold color : yellow
(13) : 1,000pcs/pack, mold color : white

Unit : mm

Part No.	HRS No.	No. of contacts	Color
DF61-2S-2.2C(11)	666-5002-4 11	2	Red
DF61-2S-2.2C(12)	666-5002-4 12	2	Yellow
DF61-2S-2.2C(13)	666-5002-4 13	2	White

Note : Please order by full packs. (1,000pcs/pack)

■Crimp contact

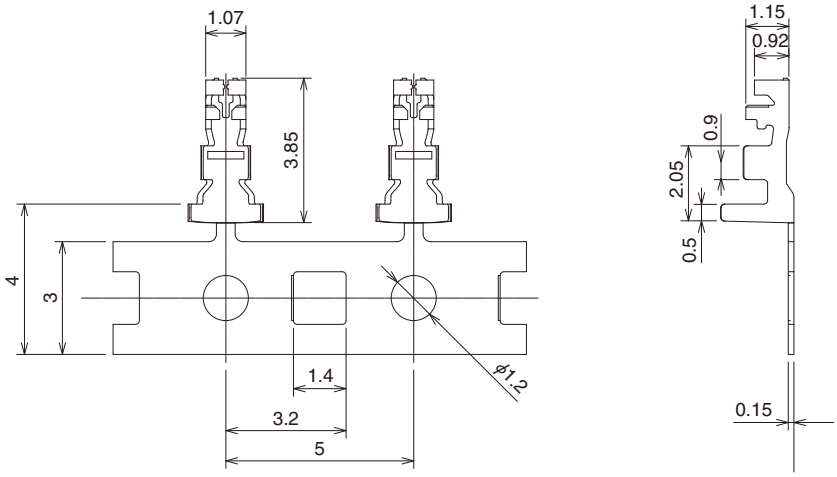

Part No.	HRS No.	Finish	Applicable Wire (Tin Plated Annealing Copper Wire) (Note 2)				
			UL Style	AWG	Wire Construction	Sectional Area	Jacket Diameter (Note 3)
DF61-2226SCF(41)	666-5004-0 41	Tin plated	10368	22 AWG 24 AWG 26 AWG	17cores/0.16mm 11cores/0.16mm 7cores/0.16mm	0.342mm² 0.221mm² 0.141mm²	0.98～1.3mm(1.26mm) 0.98～1.3mm(1.11mm) 0.98～1.3mm(0.98mm)
DF61-2628SCF	666-5005-2 00	Tin plated	10368	26 AWG 28 AWG	7cores/0.16mm 7cores/0.127mm	0.141mm² 0.089mm²	0.88～0.98mm(0.98mm) 0.88～0.98mm(0.88mm)

Note 1 : Please order in full reel quantities. (1reel =18,000pcs)
Note 2 : Please consult with our Hirose sales representative in using wires other than these applicable wires.
Note 3 : The wire with jacket diameter in parenthis is only suitable in crimping with hand tool.

◆Applicable Crimping Tools

Types	Part No.	HRS No.	Applicable Contact
Applicator	AP105-DF61-2628S	901-4632-6 00	DF61-2628SCF
	AP105-DF61-2226S	901-4621-0 00	DF61-2226SCF(41)
Press Unit	CM-105C	901-0001-0 00	————
Hand Tool	HT305/DF61-2628S	550-0305-5 00	DF61-2628SCF
	HT305/DF61-2226S	550-0304-2 00	DF61-2226SCF(41)
Extraction Tool	DF-C-PO(B)	550-0179-2 00	DF61-2628SCF, DF61-2226SCF(41)

Note 1 : Problems resulting from the use of non-authorized tools will not be warranted.
Note 2 : When non-authorized tools are used, please consult with Hirose sales representative about provision of the drawing of the crimping tool.

◆Crimping Precautions

■Items required prior to start crimping

The work-related documents shown below are required before starting the harness connections.
(The ● mark shows the document required.)
When the documents shown below are not available, ask our sales personnel to provide them.

Document Title	Description	Automatic Crimping Machine	Hand Crimping Tool	Remarks
(1) Main unit of crimping machine instruction manual	Explanation of main press machine unit	●	–	When purchasing main press machine unit, it is bundled.
(2) Operating Instructions for Applicator	Crimp operation	●	–	When purchasing Applicator, it is bundled.
(3) Applicator Spare Parts Identification	Explanation for Applicator installation	●	–	
(4) Crimp Conditions	Standard values of : Crimp height ; Tensile strength	●	–	
(5) Crimp Quality Standards	Various standards for crimping conditions	●	–	
(6) Operating Instructions for Hand Tool	Inspection items of : Crimp height ; Crimp operation Tensile strength	–	●	When purchasing Hand Tool, it is bundled.
(7) Cable Assembly Procedure	Cable Assembly Procedure	●	●	Ask our sales personal to provide them.

■Tools

When crimping work is applied to our contacts, the tool designated by Hirose should be used.
*Crimping work by using tools other than as designated must not be done because it may result in contact failure, disconnection of cable, etc.
*The operating instructions manual is available for the crimping machine and the applicator.
Be sure to carefully read the operating instructions manual before implementing the work.

■Applicable electric wires

Check that the electric wire to be used is in the range of application.
If you intend to use an electric wire other than the recommended one, ask our sales personnel.

[Precautions]

- Electric wires that are applicable for crimping connectors shall, principally, be the tin-plated stranded soft-copper wire.
- Crimping of electric wires wherein single wires, polyester yarns, etc., exist and crimping of tin-coated wires should be avoided.
- Avoid crimping two electric wires together.
- The setting values of crimp height (Note 1) may vary between tin-plated and gold-plated terminals even if the same electric wires are used.
- The setting values of crimp height (Note 1) may vary depending on the difference in the core wire configuration even if the computed cross-sectional area is the same.

Note 1 : The crimp height is an important item that determines crimping quality. We execute crimping tests for each electric wire to ensure the optimal value for the crimp height with high precision, thereby ensuring optimal setup values.

◆Operating Precautions

1. Recommended Temperature Profile (Lead-free soldering possible)	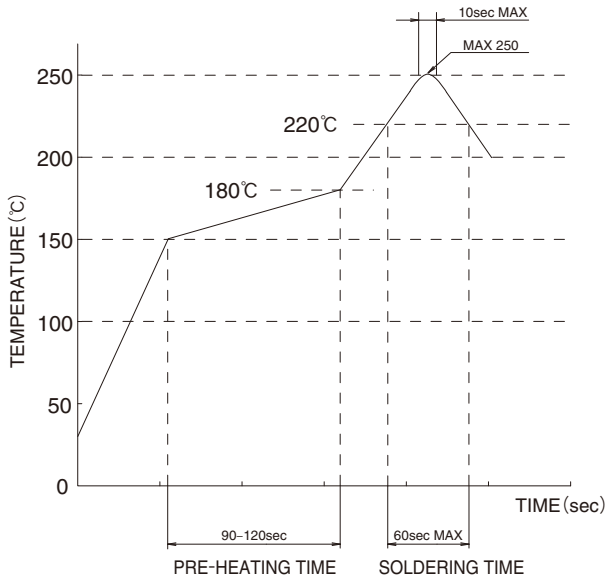 **[Applicable Conditions]** 1. Peak Temperature: MAX 250℃ 2. Heated Area: 220℃ or above, within 60 sec. 3. Pre-heating Area: 150-180℃, 90-120 sec. 4. Number of Operation: Twice or less ＊The contact lead area was measured. The conditions may change depending on the types and manufacturers of cream solder, PCB size, and conditions of other materials used for soldering. Please fully check the soldering condition before use. [Remarks 1] This temperature profile is our recommended value.
2. Recommended Hand Solder Conditions	Soldering iron temperature : 350 ± 10℃, soldering time : within 3 seconds
3. Recommended Screen Thickness, Aperture Opening Rate (Pattern Area Ratio)	Thickness 0.1mm, aperture opening rate : 100%
4. PCB Warpage	Max 0.02mm at the center of connector with the both edges of the connector as the baseline
5. Cleaning Condition	Cleaning with IPA is possible. (Cleaning is not recommended as it may change the feel of insertion/extraction, etc. Please consult with us when using other types of cleaning agents.)
6. Precautions	■ In order to maintain the performance reliability, do not insert the crimp contact into the crimp socket at a slant angle. ■ Insertion/extraction of the connector while not mounted to the PCB may cause breakage or deformation to the contact. ■ Extracting the connector by holding the cable could result in a breakage. ■ Do not apply flux at the time of hand soldering, as it may result in flux rise. ■ This product may have slightly different hue on molded items, however, they do not affect the product performance.
7. Handling Notes	Please refer to the following documents. ■Crimp Quality Standard (ETAD-H0520-00) ■Cable Assembly Procedure (ETAD-H0721-00) ■User Guide for Wire-to-Board Connector

8. Mating/Un-mating

Mating Operation

(1) Start by placing the connector against the header lock at an angle. If the plug is not started at an angle, it will cause damage to the connector.

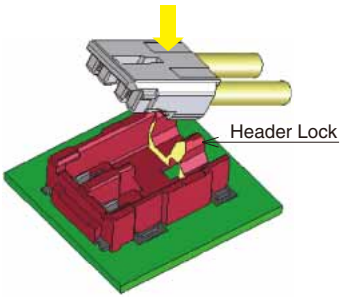

(2) Then, in a slight, rotating movement, push the front section of the plug down.

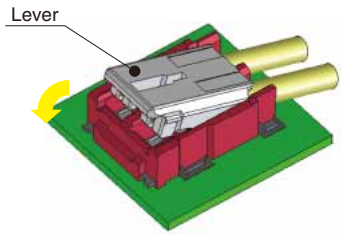

(3) Keep pressing down until a “click” feeling is sensed. The connector is now fully and properly mated.

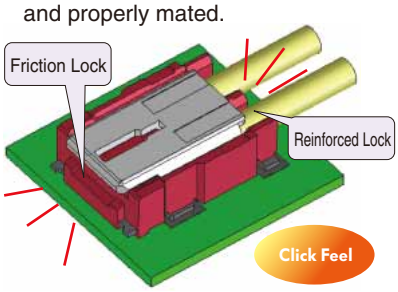

Un-mating Operation

(1) Begin by lifting up on the front section of the plug.

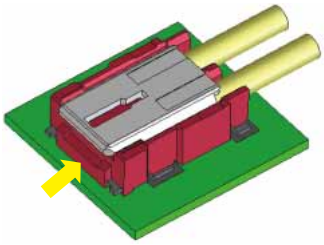

(2) Continue to rotate it upwards and release the friction lock portion.

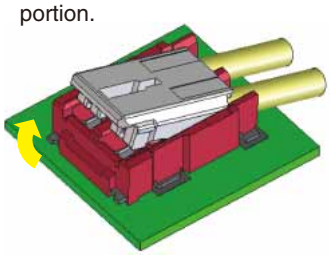

(3) Once the rear, or reinforced lock, is released the plug will come free from the header and complete the un-mating sequence.